2168 West Grove Parkway, Suite 300, Pleasant Grove, UT. 84062 USA
Telephone: 801 229-2800 • Fax: 801 224-0355

Overview

The DIN 8 Channel, 10AMP Relay Station, model number RS8-DIN, features 8 isolated latching relay channels. The station accepts voltage from 0 to 277 volts up to 10amps.The RS8-DIN does not produce any power. Four relays are single-pole, double-throw, which offers a normally closed, normally open set of contacts. The other four Relays are single-pole, single throw to offer a normally open set of contacts. Each relay has a manual actuator or button on the front of the DIN relay station which manually toggles the relay and is useful for testing wiring and operation without programming the system. Some examples for using an RS8-DIN are drapery motors, pumps, lights, HID and more. This station may also be used as a low-voltage relay station. LEDs indicate relay state. Relays latch to retain the last state in the event of a power interrupt.

Station Specifications

Description	Specification
Dimensions, HWD	85.7mm x 157.2mm x 61.9mm 3.38" x 6.19" x 2.44"
Weight	403g
Max. Voltage @ Relay	277VAC / 440VDC
Min. Voltage @ Relay	0VAC / 0VDC
Max. Current @ Relay	10A
Load Types	**ODD** (loads 1, 3, 5, 7) Incandescent • Cold Cathode • HID • Fluorescent • Resistive • Constant-Speed Motors
	EVEN (loads 2, 4, 6, 8) Resistive • Constant-Speed Motors
Number of Loads	8
Relay Actuators	8
Lightning Surge Protection High Voltage	IEEE C62.41 (6000V 3000A)
Lightning Surge Protection Low Voltage	ITU-T K.20
LED Indicators	Status and Load State
Mounting	35 mm DIN Rail (EN 50 022: 1977)
Station Bus connections*	24V / 36V Station Bus
Station Bus Specification	2C, 16AWG / 1.31mm2, twisted, non-shielded, <30pF per foot. Separate a minimum of 12" / 30.5cm from other parallel communication and/or high voltage runs.
Station Equivalent InFusion	0.7W on IC-24 / 1.1W on IC-36
Station Equivalent QLink	1 Station on QLink Main Controller
Station Wiring configuration	Daisy-chain/Star/Branch
Ambient Operating Temperature	0-40°C / 32-104°F
Ambient Operating Humidity	5-95% non-condensing
CE, UL and CUL Listed	Yes

***CAUTION:** 36V stations have a (36) symbol on the Serial Number sticker. Any station, not displaying this symbol, should not be connected to a 36Volt Station Bus.

Software/Firmware

This station is compatible with InFusion Design Center software or QLink 3.5 and Controller Firmware 6.5 or higher. For new projects it is recommended that firmware and software be kept to the most current release.

Installation

Installation of Vantage products should be performed or supervised by a *Certified Vantage Installer.* ***Do not use a DIN 8 Channel 10 Amp Relay Station to control an outlet/plug.*** **High voltage DIN products must be installed inside of a properly vented and covered DIN enclosure.** The DIN Relay Station installation is very simple. There are two methods of connecting the Station Bus to this Station:

a. Using the 2 wire pigtail connection located on the top of the DIN relay station
b. Using the pins on the side of the Station to pass Station Bus (see Drawing) part #VDC-0197.

The 8 Channel Relay Station is mounted on a standard 35 mm DIN Rail (EN 50 022: 1977).

All voltage connections to the RS8-DIN relays are wired to removable screw terminal connectors. These relays may be given custom names in software to facilitate their use in the installation.

Station Set Up in Software

InFusion: First select the room, then click on *Vantage Objects* in the *Object Explorer* and expand *Stations, WireLink*. From the list of stations double click on the *DIN 10Amp Relay Station* to place it in the room. In the *Object Editor* name the station and make sure it is on the correct station bus port.

QLink: First change to Wiring view, right click on the Main Controller and from the pop-up menu, select *Add DIN Stations | HV Relay* from the station list. This will reveal the *HV Relay Station Definition* Dialog Box. Type the name of the Station. Click OK to exit the Definition window. Right click on the station and select Add High Voltage Relay to add the relay loads. In the HV Relay Definition window, name the relay and assign it to the correct floor and room.

Programming the Relay Station

Because they are relays the eight buttons on the RS8-DIN cannot be programmed directly. Programmed Buttons, Time Controls or Host Commands in InFusion and V-Commands in QLink are used to control the relays. The relays are accessed by selecting the relay load in Programming.

Close Up of ODD and EVEN Relays

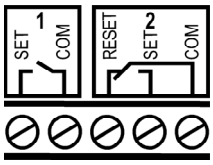

Load Assignment Guide

Notice the ODD and EVEN numbered relays are different. ODD relays have SET and COMMON connections while EVEN relays have RESET, SET and COMMON connections. *Vantage recommends that incandescent and ballast lighting loads be connected to ODD numbered relays for maximum relay life.*

CAUTION: Do not connect any Lighting Loads to the *EVEN*, Single Pole / Double Throw, relays – relays 2, 4, 6, and 8. Please see model: RS8-L-DIN, lighting relay station.

Configuration

When the station is first connected to the Station Bus, the diagnostic LED will blink twice followed by a pause, meaning that the station is connected correctly but not yet configured. From Design Center, click on the Configure Stations button on the toolbar or from QLink, select System | Configure Stations and click on the radio Configure button in the Online Configuration section from the pull down menu. Highlight the RS8-DIN station. The Status LED will blink 5 times followed by a pause and the button LEDs will blink rapidly indicating that the station is in configuration mode. To finish configuring press any button on the Station 3 times. The station may also be configured by typing the serial number in the project file, using

this method the station will automatically be configured when the system is programmed. Once configured the Status LED will blink evenly and the buttons stop blinking.

Diagnostic LED (Status)
The LED blinks steady on and off or 2, 3, 4, or 5 blinks followed by a pause:
One Even Blink: The Station is operating correctly and is configured.
Two Blinks: The Station is operating correctly but is not configured.
Three Blinks: The Station is not communicating with the Controller. Check Station Bus Wire connections.
Four Blinks: Factory problem. Please contact the factory.
Five Blinks: The Station is in configuration mode.

Blind Motor Example
In the example below notice with this design, that the OPEN and CLOSE relays to the motor cannot be turned on at the same time. This is an effective hardware interlock that protects all motors.

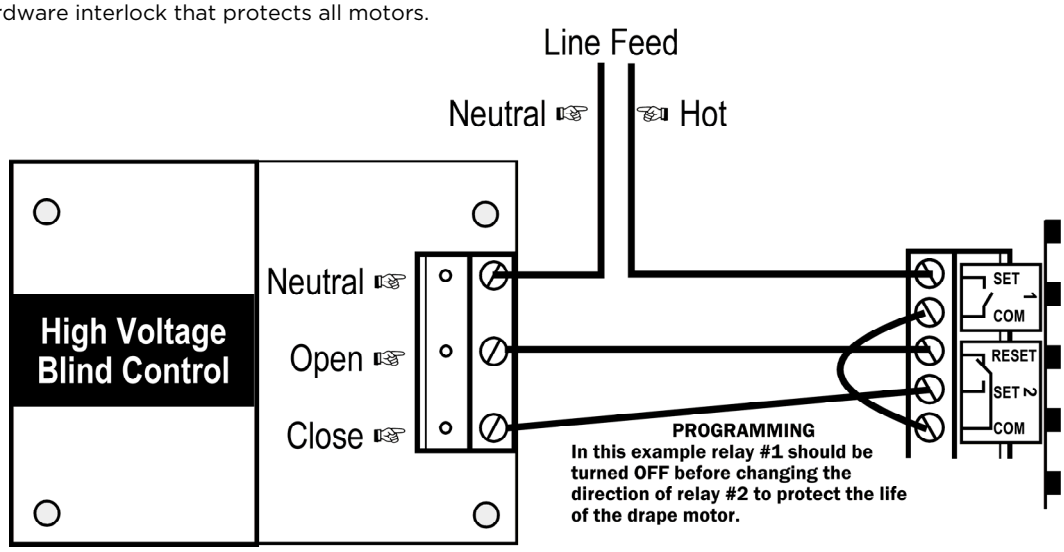

Line Drawing

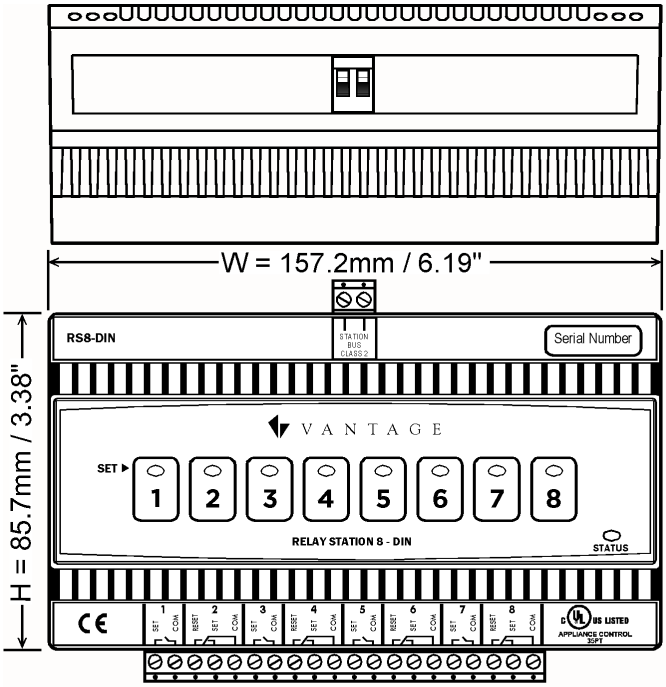

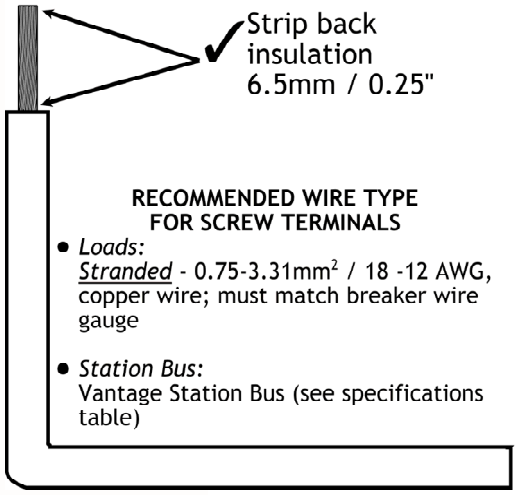

Connections

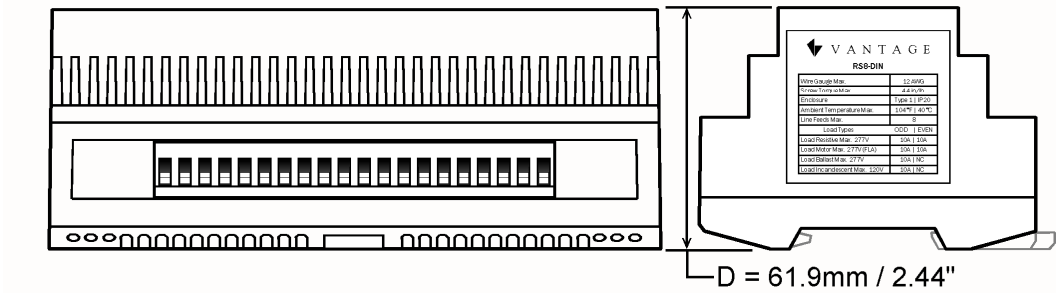

VANTAGE

RS8-DIN

Wire Gauge Max.	12 AWG
Screw Torque Max.	4.4 in/lb.
Enclosure	Type 1 | IP20
Ambient Temperature Max.	104°F | 40°C
Line Feeds Max.	8
Load Types	ODD | EVEN
Load Resistive Max. 277V	10A | 10A
Load Motor Max. 277V (FLA)	10A | 10A
Load Ballast Max. 277V	10A | NC
Load Incandescent Max. 120V	10A | NC